Cambridge Assessment International Education

Cambridge International AS & A Level

CANDIDATE NAME

CENTRE NUMBER

CANDIDATE NUMBER

0337831338

PHYSICS **9702/41**

Paper 4 A Level Structured Questions **May/June 2022**

2 hours

You must answer on the question paper.

No additional materials are needed.

INSTRUCTIONS

- Answer **all** questions.
- Use a black or dark blue pen. You may use an HB pencil for any diagrams or graphs.
- Write your name, centre number and candidate number in the boxes at the top of the page.
- Write your answer to each question in the space provided.
- Do **not** use an erasable pen or correction fluid.
- Do **not** write on any bar codes.
- You may use a calculator.
- You should show all your working and use appropriate units.

INFORMATION

- The total mark for this paper is 100.
- The number of marks for each question or part question is shown in brackets [ ].

This document has **24** pages. Any blank pages are indicated.

© UCLES 2022

Data

acceleration of free fall	$g = 9.81\ \text{m s}^{-2}$
speed of light in free space	$c = 3.00 \times 10^{8}\ \text{m s}^{-1}$
elementary charge	$e = 1.60 \times 10^{-19}\ \text{C}$
unified atomic mass unit	$1\ \text{u} = 1.66 \times 10^{-27}\ \text{kg}$
rest mass of proton	$m_\text{p} = 1.67 \times 10^{-27}\ \text{kg}$
rest mass of electron	$m_\text{e} = 9.11 \times 10^{-31}\ \text{kg}$
Avogadro constant	$N_\text{A} = 6.02 \times 10^{23}\ \text{mol}^{-1}$
molar gas constant	$R = 8.31\ \text{J K}^{-1}\ \text{mol}^{-1}$
Boltzmann constant	$k = 1.38 \times 10^{-23}\ \text{J K}^{-1}$
gravitational constant	$G = 6.67 \times 10^{-11}\ \text{N m}^2\ \text{kg}^{-2}$
permittivity of free space	$\varepsilon_0 = 8.85 \times 10^{-12}\ \text{F m}^{-1}$ $\left(\frac{1}{4\pi\varepsilon_0} = 8.99 \times 10^{9}\ \text{m F}^{-1}\right)$
Planck constant	$h = 6.63 \times 10^{-34}\ \text{J s}$
Stefan–Boltzmann constant	$\sigma = 5.67 \times 10^{-8}\ \text{W m}^{-2}\ \text{K}^{-4}$

Formulae

uniformly accelerated motion	$s = ut + \frac{1}{2}at^2$ $v^2 = u^2 + 2as$
hydrostatic pressure	$\Delta p = \rho g \Delta h$
upthrust	$F = \rho g V$
Doppler effect for sound waves	$f_\text{o} = \frac{f_\text{s} v}{v \pm v_\text{s}}$
electric current	$I = Anvq$
resistors in series	$R = R_1 + R_2 + \ldots$
resistors in parallel	$\frac{1}{R} = \frac{1}{R_1} + \frac{1}{R_2} + \ldots$

© UCLES 2022

gravitational potential	$\phi = -\frac{GM}{r}$
gravitational potential energy	$E_P = -\frac{GMm}{r}$
pressure of an ideal gas	$p = \frac{1}{3}\frac{Nm}{V}\langle c^2 \rangle$
simple harmonic motion	$a = -\omega^2 x$
velocity of particle in s.h.m.	$v = v_0 \cos \omega t$ $v = \pm \omega \sqrt{(x_0^2 - x^2)}$
electric potential	$V = \frac{Q}{4\pi\varepsilon_0 r}$
electrical potential energy	$E_P = \frac{Qq}{4\pi\varepsilon_0 r}$
capacitors in series	$\frac{1}{C} = \frac{1}{C_1} + \frac{1}{C_2} + ...$
capacitors in parallel	$C = C_1 + C_2 + ...$
discharge of a capacitor	$x = x_0 e^{-\frac{t}{RC}}$
Hall voltage	$V_H = \frac{BI}{ntq}$
alternating current/voltage	$x = x_0 \sin \omega t$
radioactive decay	$x = x_0 e^{-\lambda t}$
decay constant	$\lambda = \frac{0.693}{t_{\frac{1}{2}}}$
intensity reflection coefficient	$\frac{I_R}{I_0} = \frac{(Z_1 - Z_2)^2}{(Z_1 + Z_2)^2}$
Stefan–Boltzmann law	$L = 4\pi\sigma r^2 T^4$
Doppler redshift	$\frac{\Delta\lambda}{\lambda} \approx \frac{\Delta f}{f} \approx \frac{v}{c}$

© UCLES 2022

1 (a) (i) State Newton's law of gravitation.

.....

.....

..... [2]

(ii) Use Newton's law of gravitation to show that the gravitational field strength g at a distance r away from a point mass M is given by

$$g = \frac{GM}{r^2}.$$

[2]

(b) The Earth has a mass of 5.98×10^{24} kg and a radius of 6.37×10^{6} m.
The Moon has a mass of 7.35×10^{22} kg and a radius of 1.74×10^{6} m.
The Earth and the Moon can both be considered as point masses at their centres. Their centres are a distance of 3.84×10^{8} m apart.

(i) Show that the gravitational field strength at the surface of the Moon due to the mass of the Moon is $1.62\,\text{N kg}^{-1}$.

[1]

(ii) Explain why there is a point X on the line between the centres of the Earth and the Moon where the resultant gravitational field strength due to the Earth and the Moon is zero.

.....

.....

..... [2]

(iii) Calculate the distance x of point X from the centre of the Moon.

x = ... m [3]

[Total: 10]

2 A sphere of mass 1.6×10^{-10} kg has a charge of +0.27 nC. The sphere is in a uniform electric field that acts vertically upwards, as shown in the side view in Fig. 2.1.

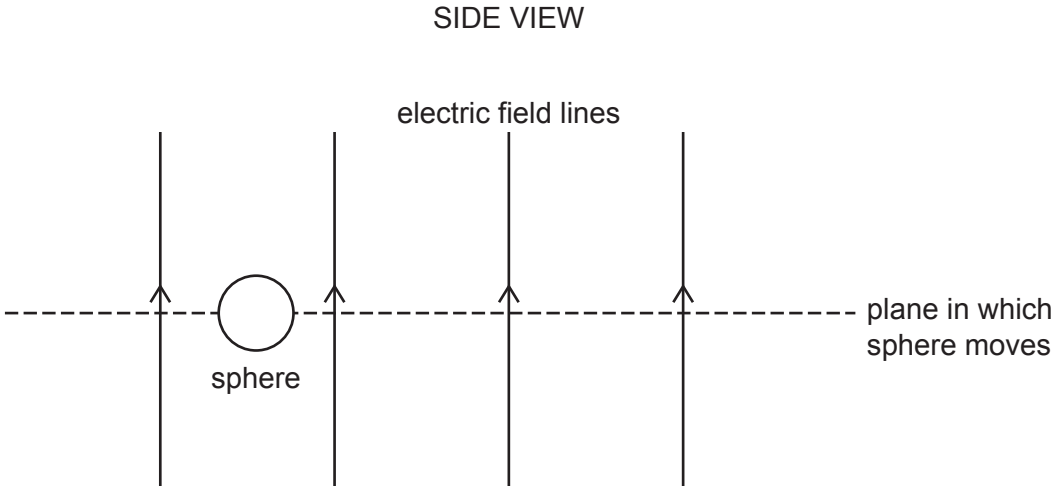

Fig. 2.1

The force exerted on the sphere by the electric field causes the sphere to remain at a fixed vertical height in a horizontal plane.

There is a uniform magnetic field in the region of the electric field. The sphere moves at a speed of $0.78\,m\,s^{-1}$ in the horizontal plane. The magnetic field causes the sphere to move in a circular path of radius 3.4 m, as shown in the view from above in Fig. 2.2.

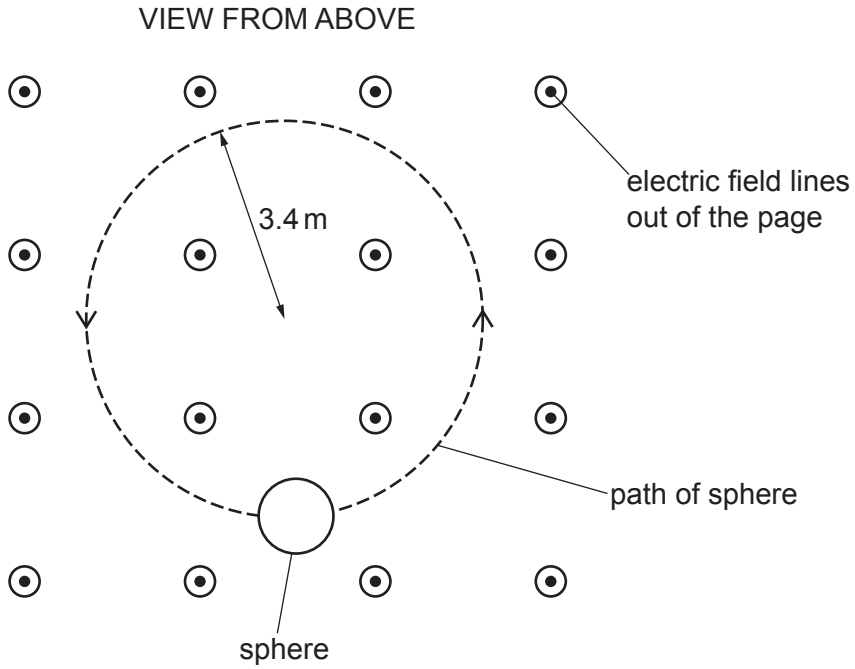

Fig. 2.2

(a) (i) Determine the direction of the uniform magnetic field.

..... [1]

(ii) Explain why the motion of the sphere in the horizontal plane is circular.

.....

.....

..... [2]

(b) Calculate the strength of the uniform electric field.

electric field strength = ... $N C^{-1}$ [2]

(c) By considering the magnetic force on the sphere, show that the flux density of the uniform magnetic field is 0.14 T.

[3]

[Total: 8]

3 A fixed mass of an ideal gas is initially at a temperature of 17 °C.
The gas has a volume of 0.24 m^3 and a pressure of 1.2×10^5 Pa.

(a) (i) State what is meant by an ideal gas.

.....

.....

..... [2]

(ii) Calculate the amount n of gas.

n = ... mol [2]

(b) The gas undergoes three successive changes, as shown in Fig. 3.1.

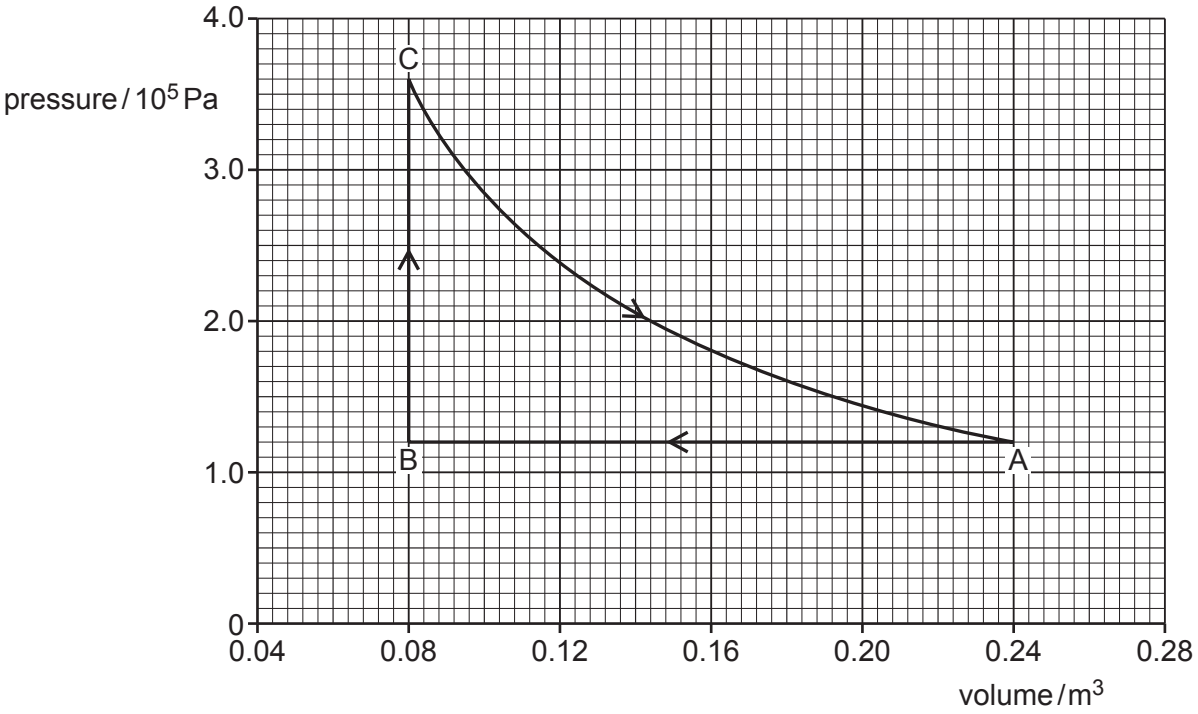

Fig. 3.1

The initial state is represented by point A. The gas is cooled at constant pressure to point B by the removal of 48.0 kJ of thermal energy.

The gas is then heated at constant volume to point C.

Finally, the gas expands at constant temperature back to its original pressure and volume at point A. During this expansion, the gas does 31.6 kJ of work.

© UCLES 2022

(i) Show that the magnitude of the work done during the change AB is 19.2 kJ.

[2]

(ii) Complete Table 3.1 to show the work done on the gas, the thermal energy supplied to the gas and the increase in internal energy of the gas, for each of the changes AB, BC and CA.

Table 3.1

change	work done on gas / kJ	thermal energy supplied to gas / kJ	increase in internal energy of gas / kJ
AB		–48.0	
BC			
CA	–31.6		

[5]

[Total: 11]

4 A pendulum consists of a bob (small metal sphere) attached to the end of a piece of string. The other end of the string is attached to a fixed point. The bob oscillates with small oscillations about its equilibrium position, as shown in Fig. 4.1.

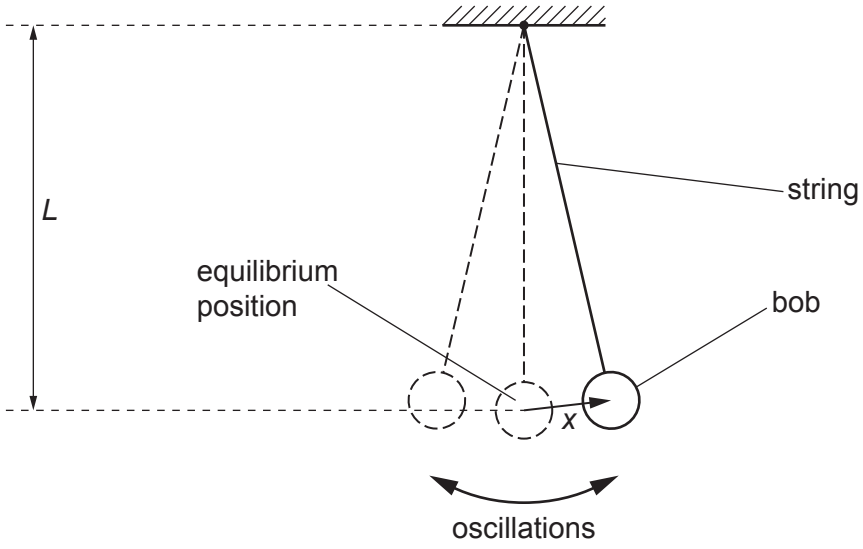

Fig. 4.1 (not to scale)

The length L of the pendulum, measured from the fixed point to the centre of the bob, is 1.24 m.

The acceleration a of the bob varies with its displacement x from the equilibrium position as shown in Fig. 4.2.

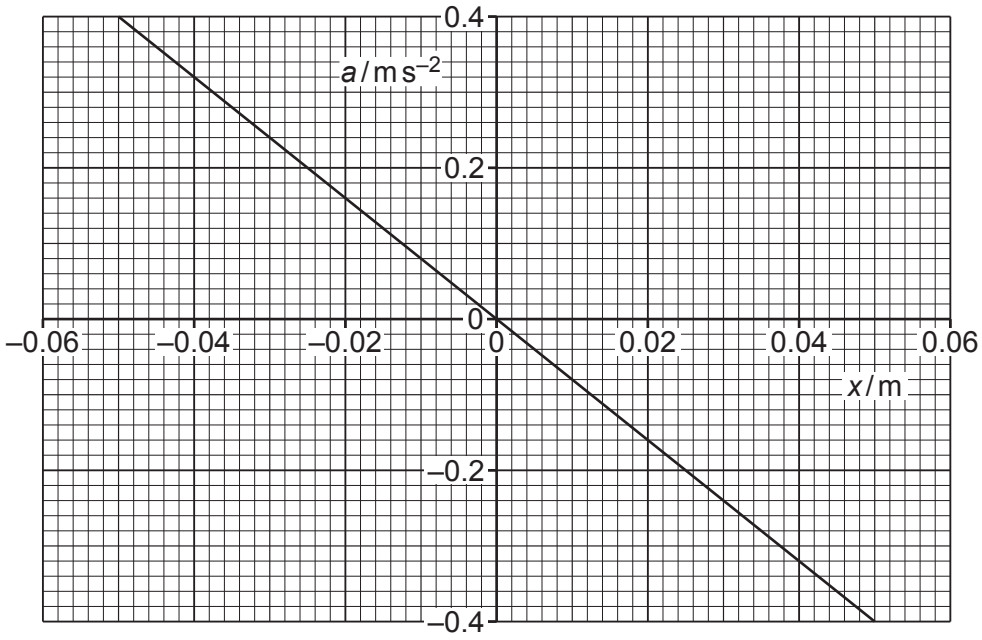

Fig. 4.2

(a) State how Fig. 4.2 shows that the motion of the pendulum is simple harmonic.

.....

.....

..... [2]

(b) **(i)** Use Fig. 4.2 to determine the angular frequency ω of the oscillations.

ω = ... rad s^{-1} [2]

(ii) The angular frequency ω is related to the length L of the pendulum by

$$\omega = \sqrt{\frac{k}{L}}$$

where k is a constant.

Use your answer in **(b)(i)** to determine k. Give a unit with your answer.

k = ... unit ..... [2]

(c) While the pendulum is oscillating, the length of the string is increased in such a way that the total energy of the oscillations remains constant.

Suggest and explain the qualitative effect of this change on the amplitude of the oscillations.

.....

.....

..... [2]

[Total: 8]

5 Fig. 5.1 shows four diodes and a load resistor of resistance 1.2 kΩ, connected in a circuit that is used to produce rectification of an alternating voltage.

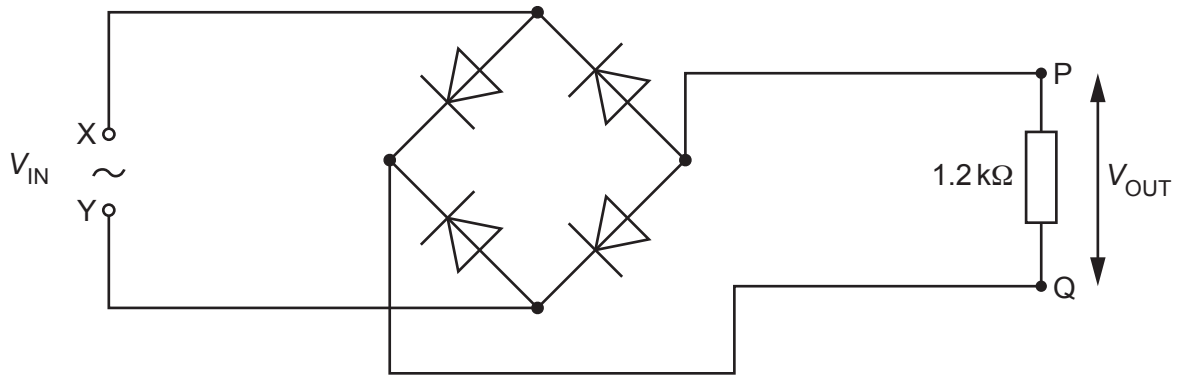

Fig. 5.1

(a) (i) State what is meant by rectification.

.....

..... [1]

(ii) State the type of rectification produced by the circuit in Fig. 5.1.

..... [1]

(b) A sinusoidal alternating voltage V_{IN} is applied across the input terminals X and Y. The variation with time t of V_{IN} is given by the equation

$$V_{IN} = 6.0 \sin 25\pi t$$

where V_{IN} is in volts and t is in seconds.

(i) On Fig. 5.1, label the output terminals P and Q with the appropriate symbols to indicate the polarity of the output voltage V_{OUT}. [1]

© UCLES 2022

(ii) The magnitude of the output voltage V_{OUT} varies with t as shown in Fig. 5.2.

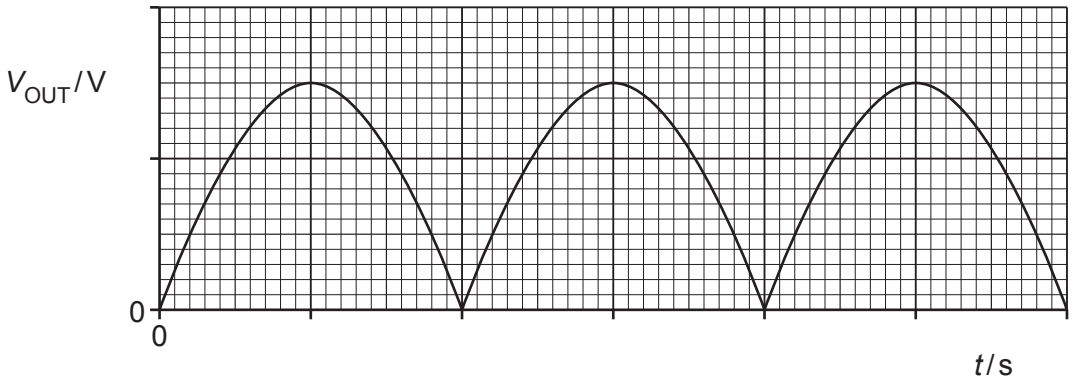

Fig. 5.2

On Fig. 5.2, label both of the axes with the correct scales. Use the space below for any working that you need.

[3]

(c) The output voltage in **(b)** is smoothed by adding a capacitor to the circuit in Fig. 5.1.
The difference between the maximum and minimum values of the smoothed output voltage is 10% of the peak voltage.

(i) On Fig. 5.1, draw the circuit symbol for a capacitor showing the capacitor correctly connected into the circuit. [1]

(ii) On Fig. 5.2, sketch the variation with t of the smoothed output voltage. [2]

(iii) Calculate the capacitance C of the capacitor.

C = ... F [3]

[Total: 12]

6 **(a)** Define magnetic flux.

.....

.....

..... [2]

(b) A square coil of wire of side length 12 cm consists of 8 insulated turns. The coil is stationary in a uniform magnetic field. The plane of the coil is perpendicular to the magnetic field, as shown in Fig. 6.1.

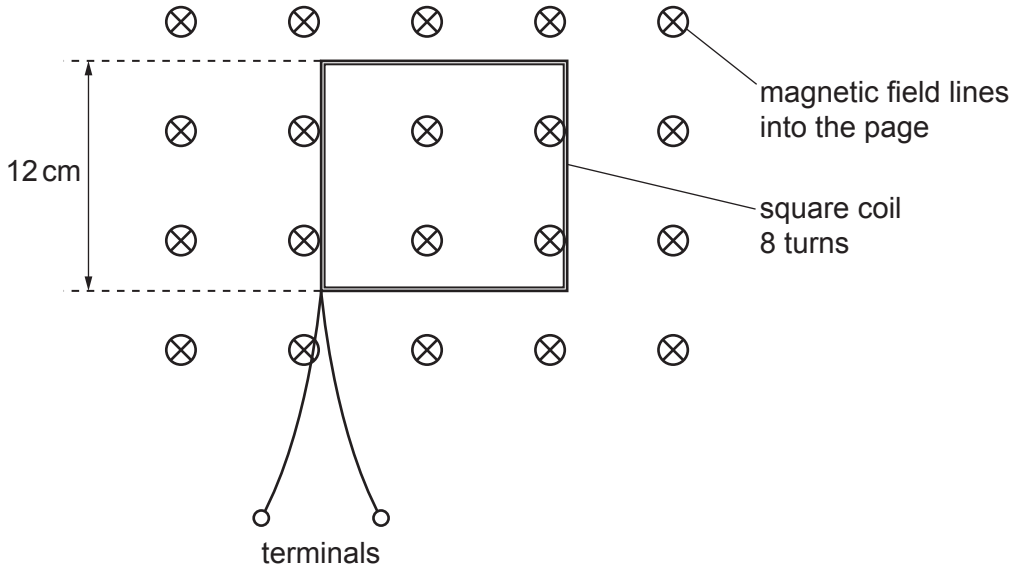

Fig. 6.1

The flux density B of the magnetic field varies with time t as shown in Fig. 6.2.

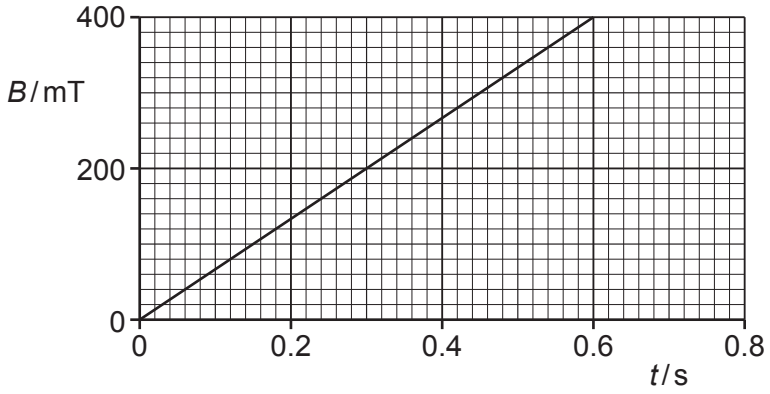

Fig. 6.2

© UCLES 2022

(i) Determine the magnetic flux linkage inside the coil at time $t = 0.60\,s$. Give a unit with your answer.

magnetic flux linkage = ... unit ..... [3]

(ii) State how Fig. 6.2 shows that the electromotive force (e.m.f.) E induced across the terminals between $t = 0$ and $t = 0.60\,s$ is constant.

..... [1]

(iii) Calculate the magnitude of E.

E = ... V [2]

(c) The procedure in **(b)** is repeated, but this time the terminals of the coil are connected together.

State and explain the effect on the coil of connecting the terminals together during the change of magnetic flux density shown in Fig. 6.2.

.....

.....

.....

..... [3]

[Total: 11]

7 **(a)** State what is meant by a photon.

.....

.....

..... [2]

(b) Electromagnetic radiation of a varying frequency f and constant intensity I is used to illuminate a metal surface. At certain frequencies, electrons are emitted from the surface of the metal. The variation with f of the maximum kinetic energy E_{MAX} of the emitted electrons is shown in Fig. 7.1.

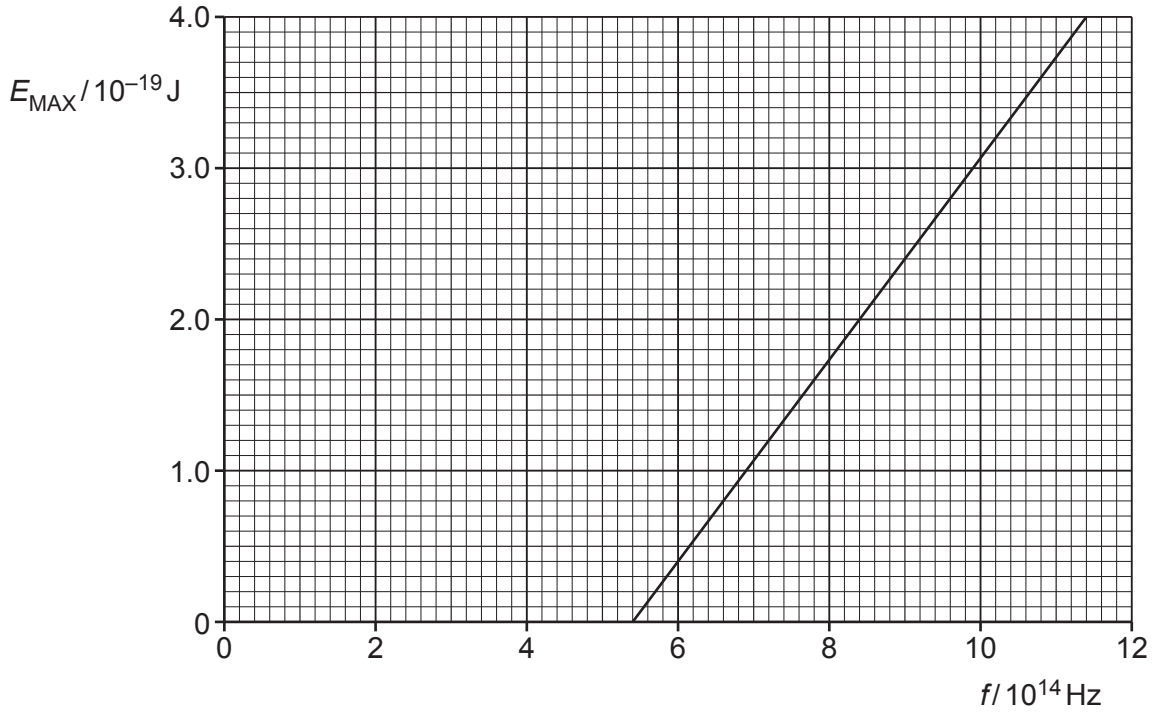

Fig. 7.1

(i) State the name of this phenomenon.

..... [1]

(ii) Describe **three** conclusions that can be drawn from the graph in Fig. 7.1. The conclusions may be qualitative or quantitative.

1 .....

.....

2 .....

.....

3 .....

.....

[3]

(c) The experiment in **(b)** is repeated twice, each time making one change.

State, with a reason, how the graph obtained would compare with Fig. 7.1 when:

(i) a different metal is used, but keeping the intensity I of the radiation the same

.....

.....

..... [2]

(ii) the same metal is used, but with electromagnetic radiation of intensity $2I$.

.....

.....

..... [2]

[Total: 10]

8 (a) (i) State what is meant by nuclear binding energy.

.....

.....

..... [2]

(ii) On Fig. 8.1, sketch a line to show the variation with nucleon number A of the binding energy per nucleon E of a nucleus.

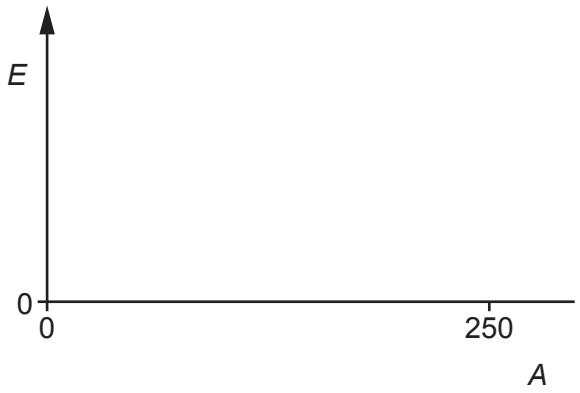

Fig. 8.1

[2]

(b) In one type of nuclear process, deuterium ($^{2}_{1}H$) undergoes the reaction

$$^{2}_{1}H + {}^{2}_{1}H \longrightarrow {}^{3}_{2}He + {}^{1}_{0}n.$$

(i) State the name of this type of nuclear process.

..... [1]

(ii) Explain, with reference to your line in **(a)(ii)**, why this reaction results in the release of energy.

.....

.....

..... [2]

(c) Table 8.1 shows the masses of the particles involved in the reaction in **(b)**.

Table 8.1

particle	mass / u
$^{1}_{0}n$	1.008 665
$^{2}_{1}H$	2.014 102
$^{3}_{2}He$	3.016 029

Calculate the energy released when 1.00 mol of deuterium undergoes the reaction.

energy = ... J [5]

[Total: 12]

9 **(a)** **(i)** Explain how X-rays are produced for use in medical diagnosis.

.....

.....

.....

..... [3]

(ii) State why X-ray images are taken of multiple sections of the body during computed tomography (CT) scanning.

.....

..... [1]

(b) An X-ray image is taken of the structure shown in Fig. 9.1.

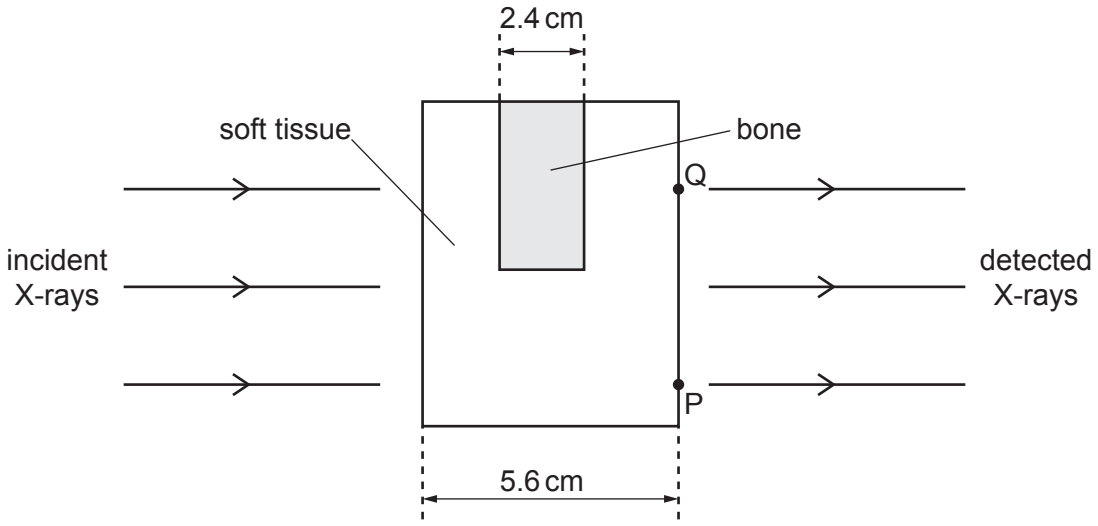

Fig. 9.1

The linear attenuation coefficient of bone is $3.4\,\text{cm}^{-1}$.
The linear attenuation coefficient of soft tissue is $0.89\,\text{cm}^{-1}$.

The incident X-rays are parallel and have a uniform intensity I_0 across the structure.

© UCLES 2022

Determine, in terms of I_0, the intensity of the detected X-rays from:

(i) point P

detected intensity = ... I_0 [2]

(ii) point Q.

detected intensity = ... I_0 [2]

(c) Explain, with reference to your answers in **(b)**, whether the X-ray image of the structure in Fig. 9.1 has good contrast.

.....

.....

..... [1]

[Total: 9]

10 (a) State Wien's displacement law.

.....

..... [1]

(b) Fig. 10.1 shows the wavelength distributions of electromagnetic radiation emitted by two stars A and B.

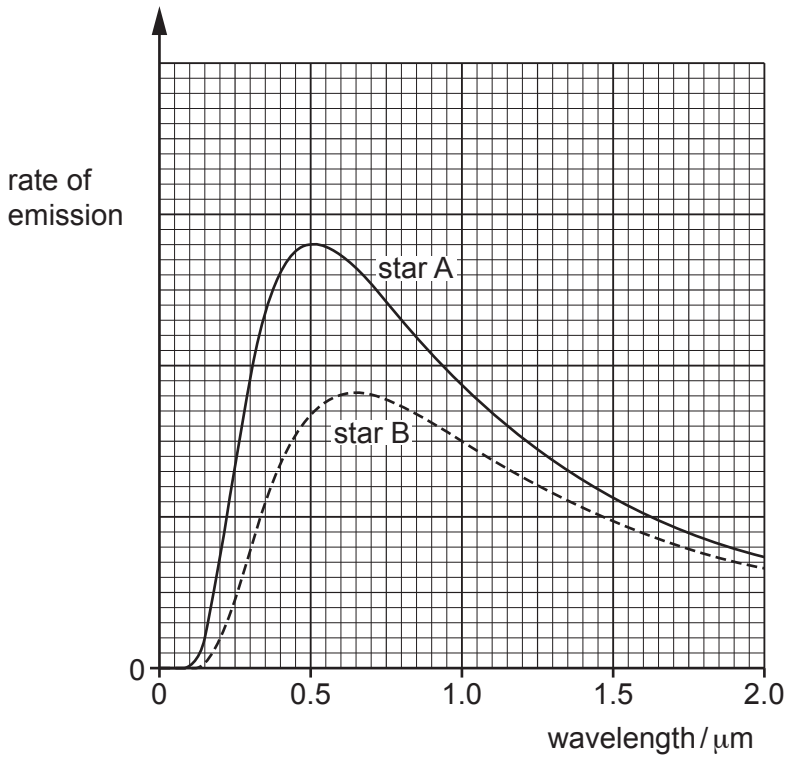

Fig. 10.1

The surface temperature of star A is known to be 5800 K.

(i) Determine the surface temperature of star B.

surface temperature = ... K [2]

© UCLES 2022

(ii) Star B appears less bright than star A when viewed from the Earth.

Use Fig. 10.1 to suggest, with a reason, how else the physical appearance of star B compares with that of star A.

.....

.....

..... [2]

(c) The lines in Fig. 10.1 have been corrected for redshift.

(i) State what is meant by redshift.

.....

.....

..... [2]

(ii) Explain how cosmologists are able to determine that light from a distant star has undergone redshift.

.....

.....

..... [2]

[Total: 9]

© UCLES 2022

BLANK PAGE

Permission to reproduce items where third-party owned material protected by copyright is included has been sought and cleared where possible. Every reasonable effort has been made by the publisher (UCLES) to trace copyright holders, but if any items requiring clearance have unwittingly been included, the publisher will be pleased to make amends at the earliest possible opportunity.

To avoid the issue of disclosure of answer-related information to candidates, all copyright acknowledgements are reproduced online in the Cambridge Assessment International Education Copyright Acknowledgements Booklet. This is produced for each series of examinations and is freely available to download at www.cambridgeinternational.org after the live examination series.

Cambridge Assessment International Education is part of Cambridge Assessment. Cambridge Assessment is the brand name of the University of Cambridge Local Examinations Syndicate (UCLES), which is a department of the University of Cambridge.

© UCLES 2022